Zambelis LIGHTS

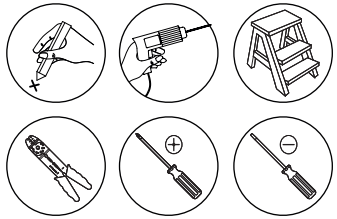

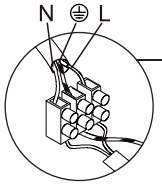

Connecting the Terminal Block

Connect main supply (**brown - Live, blue - Neutral**) into terminal block making sure all connections are tight.

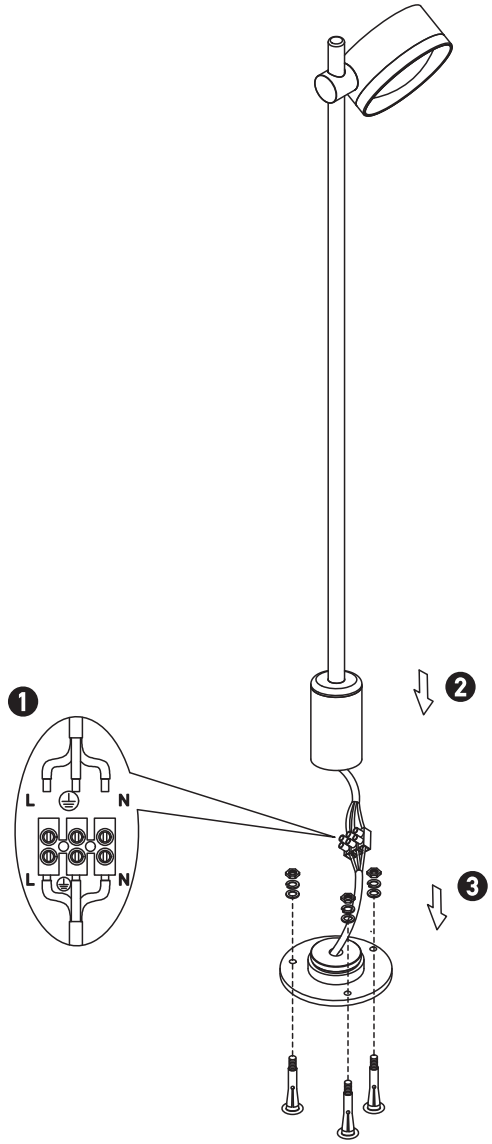

OUTDOOR BOLLARD E533

Please read instructions before commencing installation and retain for future reference.

SPECIFICATIONS

- **Lamp Type:** LED I 9W I 3000K I CRi 90
- **Material:** Aluminium - Tempered Glass
- **Ingress Protection:** IP65 Protection against entry of solid objects greater than 12mm in diameter.

INSTALLATION INSTRUCTIONS

⚠ Electrical products can cause death, injury, or property damage. Maintenance and installation should only be carried out by a professional electrician.

- Ensure the main supply is switched off.
- Follow the instructions step by step.
- Connect the positive and negative ground wires, and connect the power cord.
- Making sure all connections are tight.
- Reconnect power.

WARNING

⚠ Make sure that the products are installed properly before connecting to electricity.
Do not cover the luminaire.
Do not exceed the maximum wattage rating of the lamp.
If the light source is contained in this luminaire (integrated LED), it shall only be replaced by the manufacturer, his service agent, or a similarly qualified person.



TÜV AUSTRIA EN ISO 9001:2015 No. : 20001250014453
TÜV AUSTRIA EN ISO 14001:2015 No. : 20051250014454
TÜV AUSTRIA ISO 45001:2018 No. : 20152260017859

3 YEARS WARRANTY

CE

12092026