Zambelis LIGHTS

OUTDOOR SPIKE E473

Please read instructions before commencing installation and retain for future reference.

SPECIFICATIONS

- **Lamp Type:** LED I 25W I 3000K I CRi 90
- **Material:** Aluminium I Glass
- **Ingress Protection:** IP65 I Protection against entry of solid objects greater than 12mm in diameter.

INSTALLATION INSTRUCTIONS

⚠ Electrical products can cause death, injury, or property damage. Maintenance and installation should only be carried out by a professional electrician.

- Ensure the main supply is switched off before connecting to electricity.

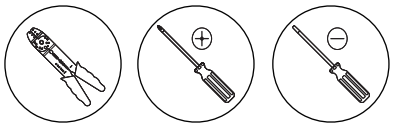

Power Off

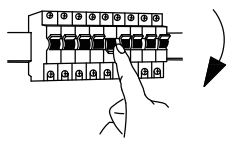

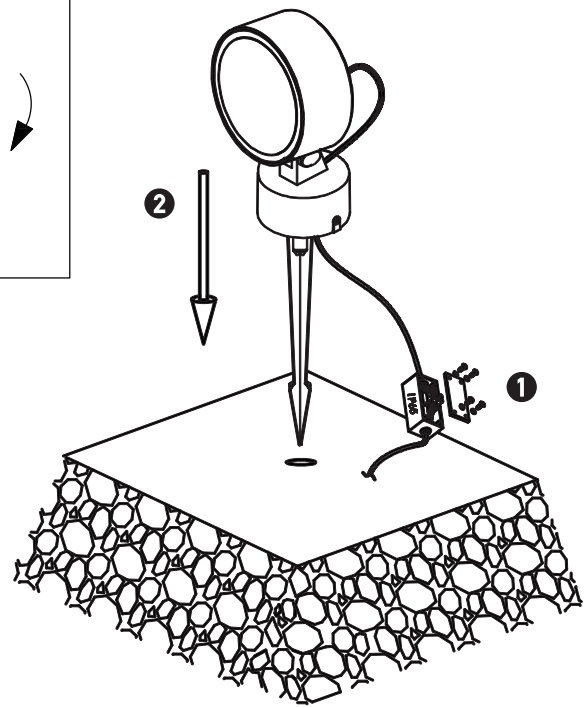

Power On

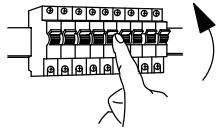

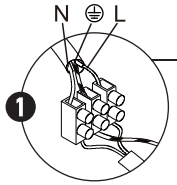

Connecting the Terminal Block

Connect main supply (**brown - L**ive, **blue - N**eutral) into terminal block making sure all connections are tight.

WARNING

⚠ Make sure that the products are installed properly before connecting to electricity.
Do not cover the luminaire.
Do not exceed the maximum wattage rating of the lamp.
If the light source is contained in this luminaire (integrated LED), it shall only be replaced by the manufacturer, his service agent, or a similarly qualified person.



08122025