Zambelis LIGHTS

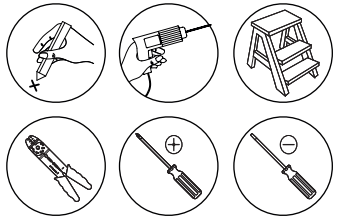

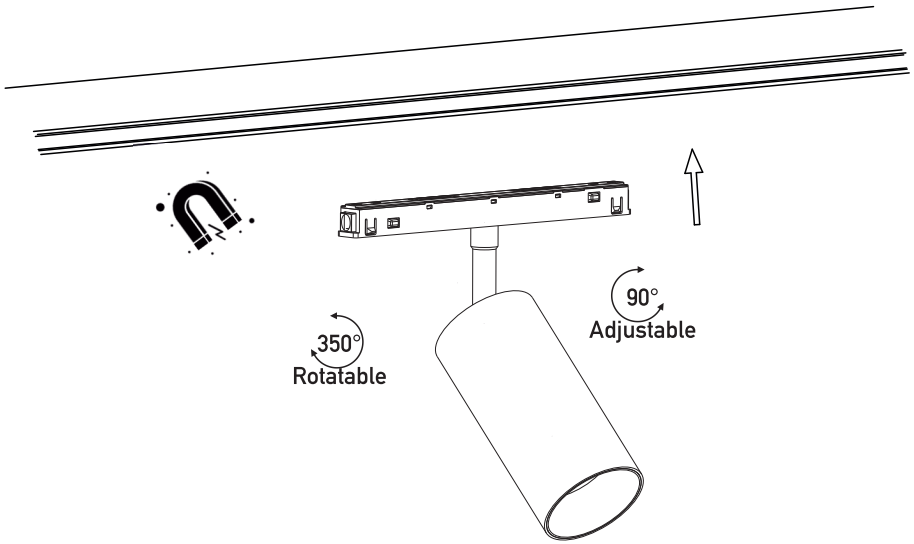

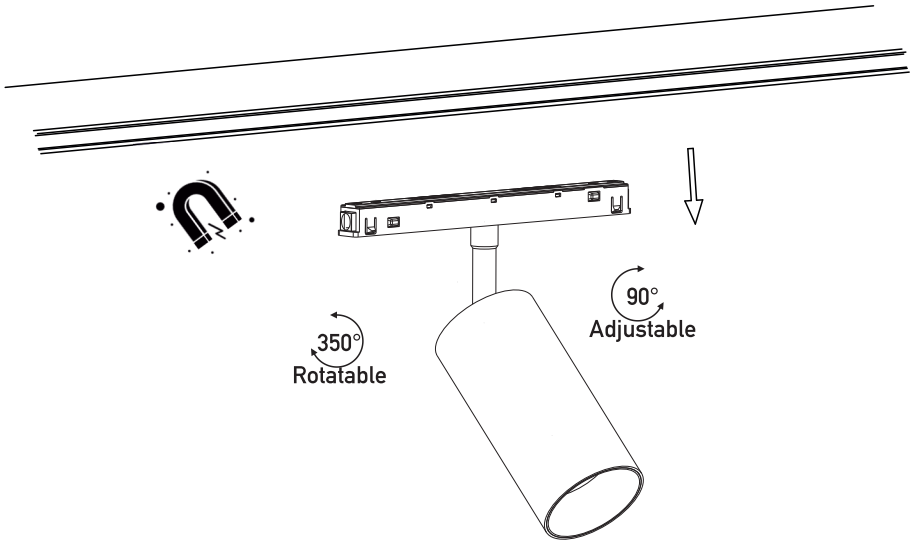

MAGNETIC SPOT LIGHT 20412

Please read instructions before commencing installation and retain for future reference.

SPECIFICATIONS

- **Lamp Type:** LED I 15W I 48V I 3000K I CRi 90 I DALI Dimmable
- **Material:** Aluminium

- **Compatibly Magnetic System:** 48V Linear Magnetic Tracks System 23mm
- **Ingress Protection:** IP 20 Protection against entry of solid objects greater than 12mm in diameter.

INSTALLATION INSTRUCTIONS

⚠ Electrical products can cause death, injury, or property damage. Maintenance and installation should only be carried out by a professional electrician.

- Turn off the main power supply.
- Follow the step-by-step instructions to install the system.
- Press the light gently into the magnetic rail until it snaps into place.
- Check that all connections are tight.
- Adjust the light's corner to the position you prefer.
- Turn on the main power supply.

WARNING

⚠ Make sure that the products are installed properly before connecting to electricity.
Do not cover the luminaire.
Do not exceed the maximum wattage rating of the lamp.
If the light source is contained in this luminaire (integrated LED), it shall only be replaced by the manufacturer, his service agent, or a similarly qualified person.

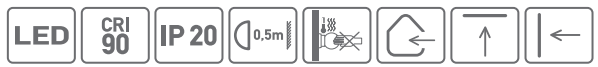

TÜV AUSTRIA EN ISO 9001:2015 No. : 20001250014453
TÜV AUSTRIA EN ISO 14001:2015 No. : 20051250014454
TÜV AUSTRIA ISO 45001:2018 No. : 20152260017859

5 YEARS WARRANTY

CE

13052026