Zambelis
LIGHTS

MAGNETIC SPOT LIGHT 2525

Please read instructions before commencing installation and retain for future reference.

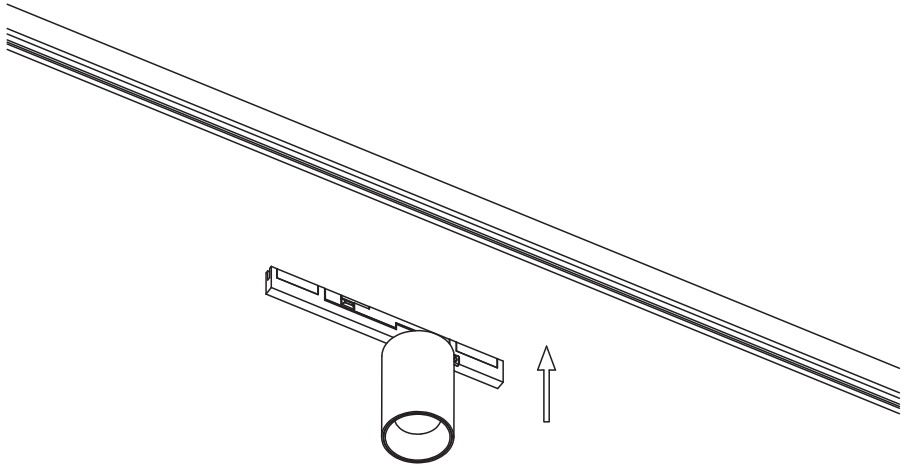

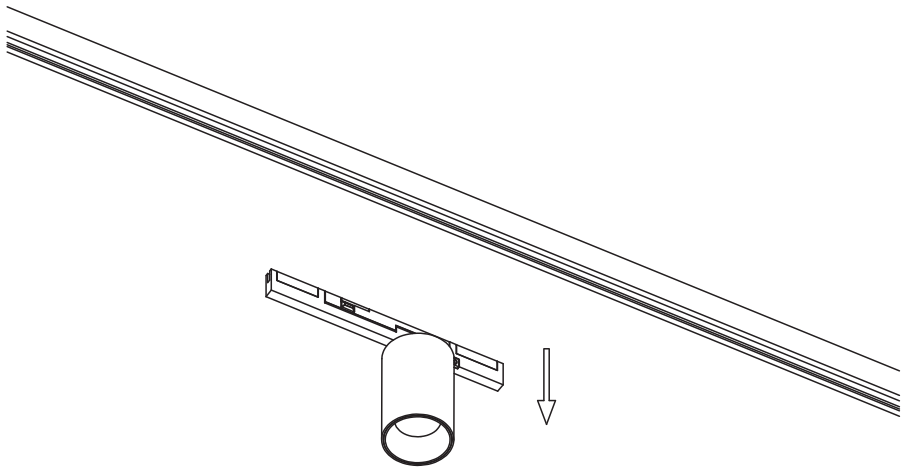

SPECIFICATIONS

- **Lamp Type:** LED | 7W | 3000K | CRi 90 | DALI | Beam Angle 36°
- **System Type:** 48V Magnetic Track System 5mm
- **Material:** Aluminium | Aluminium Adapter
- **Ingress Protection:** IP 20 Protection against entry of solid objects greater than 12mm in diameter.

INSTALLATION INSTRUCTIONS

⚠ Electrical products can cause death, injury, or property damage.
Maintenance and installation should only be carried out
by a professional electrician.

- Ensure the main power supply is switched off.
- Complete the magnetic system according to your preferences.
- Connect the wires and power cord following the system installation manual.
- Make sure all connections are secure and tight.
- Install the magnetic light in the desired position by inserting it into the tracks.
- Reconnect the power supply.

WARNING

⚠ Make sure that the products are installed properly before connecting to electricity.
Do not cover the luminaire.
Do not exceed the maximum wattage rating of the lamp.
If the light source is contained in this luminaire (integrated LED),
it shall only be replaced by the manufacturer,
his service agent, or a similarly qualified person.

LED | CRI 90 | IP 20 | 0,5m

12032026