The trusted value of OSRAM Digital Systems continues with Inventronics Global – where experience meets innovation.

ELEMENT 30/220-240/24 G2

ELEMENT G2 24V | Constant Voltage – Non dimmable

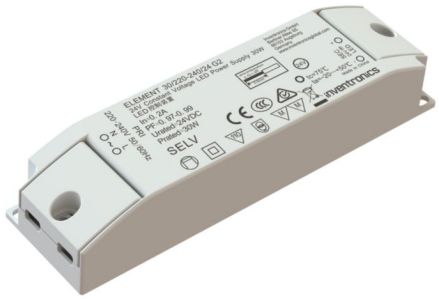

Product family features

- Linear form factor
- Power factor: >0.95 at full load
- Total Harmonic Distortion (THD): < 15%
- Output voltage tolerance: < 3%
- Up to 30,000 h @ T_c max / up to 50,000 h @ T_c -10 °C
- Lifetime: up to 30,000 h (temperature at max. t_c)

Product family benefits

- High efficiency (up to 92%)
- Higher quality of light thanks to < 3% output ripple current
- Excellent price/performance ratio
- Class II design for wide application
- 3 years guarantee

Specifications are subject to changes without notice.

© 2024,Inventronics GmbH. All rights reserved.

Areas of application

- Decorative lighting in hospitality, restaurants and Shops
- Shelf lighting
- Cove lighting
- Under cabinet lighting

Specifications are subject to changes without notice.
© 2024,Inventronics GmbH. All rights reserved.

Technical data

Electrical data

Nominal input voltage	220…240 V
Mains frequency	50…60 Hz
Input voltage AC	198…264 V
Input voltage DC	not relevant
Total harmonic distortion	< 10 %
Power factor λ	0.95
Efficiency in full-load	86 % [1)]
Device power loss	4.9 W [2)]
Inrush current	< 16 A [3)]
Max. ECG no. on circuit breaker 10 A (B)	13
Max. ECG no. on circuit breaker 16 A (B)	23
Surge capability (L-N)	1 kV
Nominal output voltage	24 V
U-OUT (working voltage)	25 V
Nominal output power	30 W
Maximum output power	30 W [4)]
Galvanic isolation	SELV

1) at 230 V, 50 Hz
2) At Full load, 230 V, 50 Hz
3) At 240 µs
4) at steady state

© 2024,Inventronics GmbH. All rights reserved.

Dimensions & weight

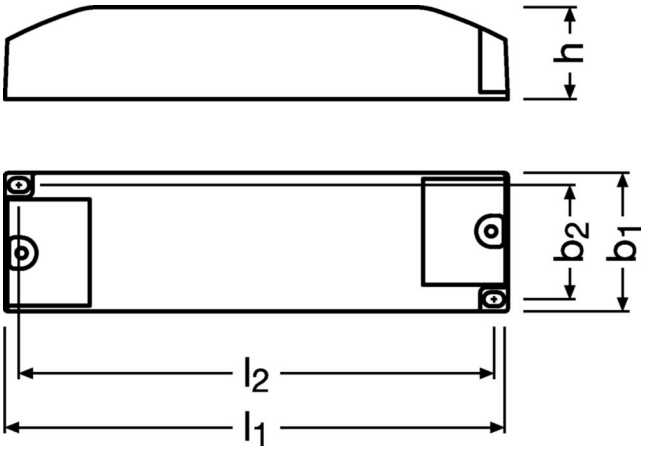

Length	145.0 mm
Width	40.0 mm
Height	26.5 mm
Mounting hole spacing, length	137.0 mm
Cable cross-section, input side	0.75…1.5 mm²
Cable cross-section, output side	0.75…1.5 mm²
Wire preparation length, input side	5.0 mm
Wire preparation length, output side	5.0 mm
Product weight	107.00 g

Colors & materials

Casing material	Plastic

Temperatures & operating conditions

Ambient temperature range	-20…+50 °C
Maximum temperature at tc test point	75 °C
Max.housing temperature in case of fault	110 °C
Temperature range at storage	-40…+85 °C
Permitted rel. humidity during operation	5…85 % [1)]

1) Non-condensing

© 2024,Inventronics GmbH. All rights reserved.

Lifespan

ECG lifetime	30000 h [1)]

1) At maximum T_c / 10% failure rate

Capabilities

Dimmable	No
Max. cable length to lamp/LED module	3.0 m [1)]
Suitable for fixtures with prot. class	I / II
Type of connection, input side	Terminal
Type of connection, output side	Terminal
Number of channels	1
Overheating protection	Yes
Overload protection	Yes
Short-circuit protection	Yes
Intended for no-load operation	No

1) Output wires must be routed as close as possible to each other

© 2024,Inventronics GmbH. All rights reserved.

Certificates & standards

Approval marks – approval	CE / RCM / CCC / MM
Standards	IEC 61347-1 / IEC 61347-2-13 / IEC 62384 / IEC 61000-3-2 / CISPR 15 / IEC 61000-3-3 / IEC 61547
Type of protection	IP20

Logistical data

Commodity code	85044083900

Environmental information

Information according Art. 33 of EU Regulation (EC) 1907/2006 (REACh)	
Date of Declaration	19-11-2025
Primary Article Identifier	4052899605503 | 6937186161833
Declaration No. in SCIP database	In work
SCIP_STATUS	In work
SCIP_ID	

© 2024,Inventronics GmbH. All rights reserved.

Ecodesign regulation information:

Intended for use with LED modules.
The forward voltage of the LED light source shall be within the defined operating window of the control gear in all operating conditions including dimming if applicable.

Separate control gear and light sources must be disposed of at certified disposal companies in accordance with Directive 2012/19/EU (WEEE) in the EU and with Waste Electrical and Electronic Equipment (WEEE) Regulations 2013 in the UK. For this purpose, collection points for recycling centres and take-back systems (CRSO) are available from retailers or private disposal companies, which accept separate control gear and light sources free of charge. In this way, raw materials are conserved and materials are recycled.

© 2024,Inventronics GmbH. All rights reserved.

Additional product information

- EMI pass verified with wire length of 3 m, from the ECG to the LED module at full load.
- Wiring longer than 3 m from ECG to LED module is possible, but site installation conditions may interfere with EMI with these longer cables. EMI is therefore not verified in this condition.
- For wires longer than 3 m, the appropriate cable cross section must be carefully selected to reduce voltage drop.

© 2024,Inventronics GmbH. All rights reserved.

Download Data

File		
Product Datasheet	PDF	►ELEMENT 30 G2 Technical Datasheet (EN)
CAD data	Compressed	►ELEMENT 30 24V G2 STEP 041219
CAD data	Compressed	►ELEMENT 30 24V G2 IGS 041219
Mandatory Publications	PDF	►ELEMENT G2 UK DoC 4307614 01 061022
Declarations of conformity	PDF	►ELEMENT 24V G2 CE 3776665 08 201225
User instruction	PDF	►ELEMENT G2 Constant Voltage Power Supply

Specifications are subject to changes without notice.
© 2024,Inventronics GmbH. All rights reserved.

Logistical Data

Product code	Product description	Packaging unit (Pieces/Unit)	Dimensions (length x width x height)	Volume	Gross weight
4052899605503 OSRAM	ELEMENT 30/220-240/24 G2	Shipping carton box 40 Pieces	421 x 315 x 96 mm	12.73 dm³	120.98 g
6937186161833 INVENTRONICS	ELEMENT 30/220-240/24 G2	Shipping carton box 40 Pieces	421 x 315 x 96 mm	12.73 dm³	120.98 g

The mentioned product code describes the smallest quantity unit which can be ordered. One shipping unit can contain one or more single products. When placing an order, for the quantity please enter single or multiples of a shipping unit

References / Links

For more information on the multi-level guarantee and the terms and conditions of the guarantee visit https://www.inventronics-light.com/multilevel-guarantees

Disclaimer

Subject to change without notice. Errors and omission excepted. Always make sure to use the most recent release.

© 2024,Inventronics GmbH. All rights reserved.