Product Data Sheet

Code 2525

Color: Black Matt

Date: 10/12/2025

Zambelis Lights



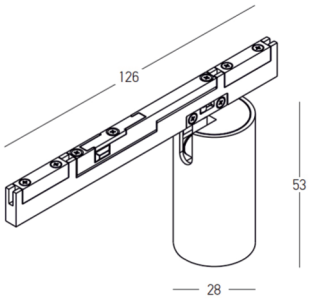

Physical Specifications

Luminaire Type	Indoor Magnetic Track Lights
Color	Black Matt
Material	Aluminium - Aluminium Adapter
IP	20
Warranty	5 Years

Dimensions Reference

Overall Dimensions	Ø: 28mm H: 53mm
Cable & Wires	None
Depth Required	None
Cutting Hole	None

Illumination Data

Color Temperature	3000K
Cri	90
Lumen Output	339Lm
Beam Angle	36°
UGR	N/A
Energy Efficiency Class	F
Indicative Lifetime	L70B50 30000H
Mc Adam	SDCM<4

Electrical Specifications

Input Voltage	48V
Power	7W
Light Source	LED built in
Dimming Options	DALI
Connection	Magnetic
Safety Class	III

Packing Info

Package Size	L: 12.5cm W: 4cm H: 9.5cm
Gross Weight	0.35kg

Product Description

Magnetic LED Light for Magnetic Tracks 5mm
7W 3000K Black Matt Aluminium

LED IP20 30K HOURS CRi90 DIMMABLE

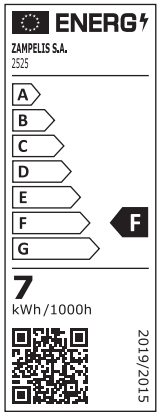

5 212031 014733

5 YEARS WARRANTY

www.zambelislights.gr | info@zambelislights.gr

Greece , Attica , Keratea , Kivouri | Postal Code: 19001 | P.O. Box: 4791
Tel.: (+30) 22990 63518-19 | Fax: (+30) 22990 63521

ANDROID APP ON Google play
Available on the iPhone App Store